Modernizing Wet Process Fiberboard Plants

We design for the future !

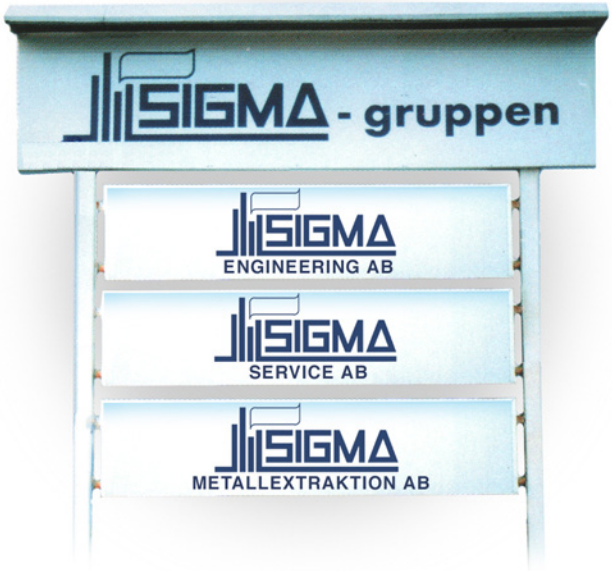

The Sigma Group

....stands for Swedish engineering with experience for more than 25 years. Combined with modern material technologies, we produce high quality equipment with high throughput, high reliability, low downtimes, easy to clean, corrosion proof and low cost of ownership.

We combine renown professionals from the equipment, chemistry and yield management fields, with interconnect process equipment and ecological recycling technologies.

SIGMA ENGINEERING AB

....is the holder of patents and material assets
....has developed designed and patented decontemination equipment for the Nuclear Power industry.

SIGMA SERVICE AB

....has designed and manufactured equipment for the wet hard board industry.
....has designed and manufactured the *Modumatic process* concept with thin core capability for the electronic industry.
....has designed and manufactured cleaning equipment for the nuclear power and Automobile industry.
Close to 700 systems have been designed, built and installed world wide.

SIGMA METALLEXTRAKTION AB

....has developed, designed and patented the *Mecer process* for onsite recycling of ammoniacal and acidic etchants used in the manufacture of printed circuit boards. This process eliminates the requirement of transporting hazardous spent etchant. It eliminates the consumption of replenisher, reduces water and waste treatment costs as well as it greatly improves control of the etching process. More than 100 of these units have been designed, built and installed world wide. The staff at Sigma has years of experience in the onsite regeneration of etchant.

”Good co-operation with our customers is the basis of our competence. Without it, we wouldn’t have been able to reach the top position we have today regarding design, quality and precision.”

Modernizing Wet Process Fiberboard plants

Sigma is a world leading supplier of wet process fiberboard technology. Our staff has been designing, manufacturing and installing production lines for wet process fiberboard for more than 25 years.

Meeting Future Needs Profitably with Sigma

One of the most important goals for all hardboard producers today is to increase the profitability of their operations.

In a perfect world, this is achieved by increasing plant capacity, by improving the quality of the end product and by reducing production costs.

It sounds simple. The textbook solution. But we've been in this business long enough to know that we don't always live in a perfect world.

For example, many of today's wet-process fiberboard plants have been in existence an average of more than 30 years. The technology and equipment in the oldest plants are usually outdated, resulting in excessive machine downtime, high maintenance costs, expensive production and ultimately, inferior product quality. Often, the only economical alternative for achieving profitability improvements is to shut down old lines and install a new plant. However, in other cases improved profitability can be achieved through less drastic measures.

This is where Sigma can help.

We have been engineering and installing fiberboard plants for the past 25 years.

Regardless of what type or make of equipment or process currently installed in your mill, we are prepared to offer you a program of equipment and technology, at a reasonable investment, that can increase your production, improve board quality and reduce your production overheads. Our complete range of second hand Defibrators, pulp handling systems, wet forming machines, transport systems, presses and other equipments help you modernize any stage in your plant - from the woodyard to the treatment of the board.

For example, we specialize in the design of new process systems that minimize energy consumption and reduce or eliminate water pollution problems - features which contribute significantly to increased profitability.

Modernizing Wet Process Fiberboard plants

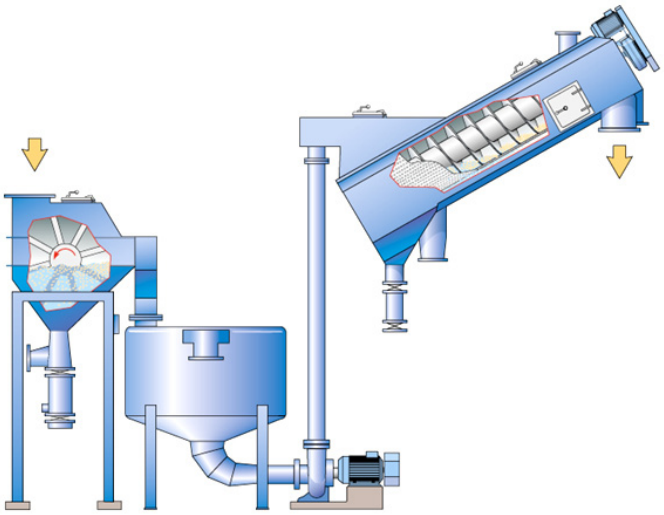

Today, no plant can afford the production disturbance and machine wear caused by contaminated chips. With a high-efficiency chip washer, the lifetime of the screw feeder, refiner segments, valves, pipes and saws are extended considerably. This results in less maintenance work, lower spare parts costs and increased production.

New Generation of Refiners

rapid advances have been made in recent years in the field of refiner technology. The modern construction of new generation of refiners ensures more stable, better controlled refining conditions. They are also compatible with modern control systems, which means that all refining parameters can be supervised and the refiner operated from a remote control room.

Single-Stage Refining Saves Energy

Pressurized refining requires less energy than pulping at atmospheric pressure. That is why Sigma recommends refining of the fiber to its optimum quality level in a single pressurized refining stage during hardboard production.

Post refining at atmospheric pressure is usually only necessary if an especially finely refined fiber is required, for example, as a surface layer to improve the board's paintability.

Single-stage refining is not only an easier system to operate, it is also very energy efficient. Compared with a two-stage line of corresponding capacity, a pressurized single-stage Defibrator reduces total elctric energy consumption for fiber preparation by up to 24 percent.

Single-Machine Plant

Operating statistics show that a single high-capacity Defibrator is more efficient than several small ones. The reliability of these Defibrators in single-machine production processes has been proven in many fiberboard plants currently in operation worldwide.Whatever the size of your plant, or the number of production lines, Sigma can deliver a single-stage second hand Defibrator to meet all your refining needs.

New Generation of refiner segments

Segment suppliers currently offers a product portfolio featuring low-energy concepts for all types of refining applications whatever brand of refiners. With the introduction of the new bi-directional segments. Sigma has succeded in reducing electrical energy by up to 15% in fibreboard applications.

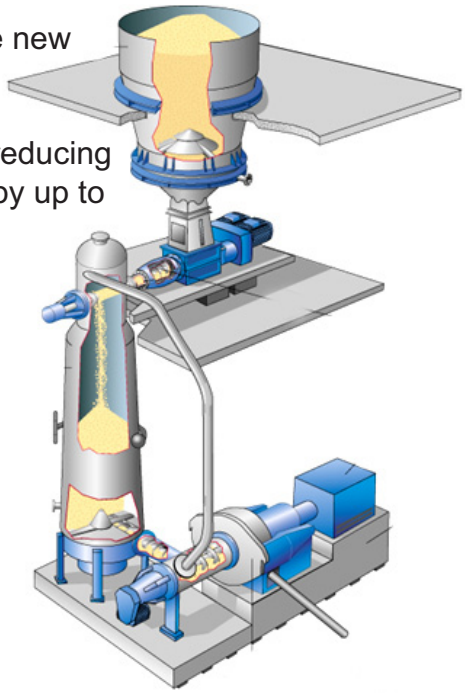

Modernizing Wet Process Fiberboard plants

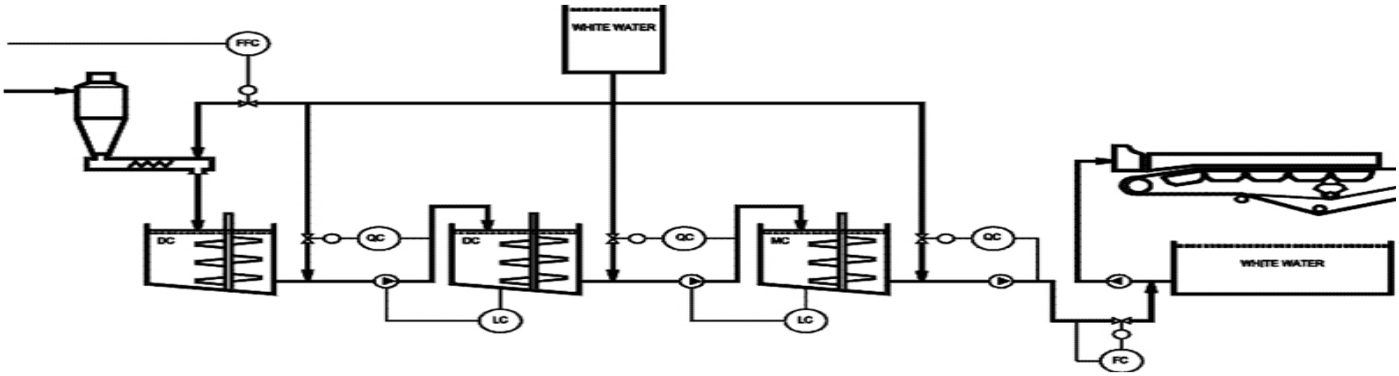

Maintaining pulp quality
Pulp quality is not solely dependent on the quality of the fiber. It is also related to fiber mixture, consistency, flow, pH, chemicals and other parameters - all equally important to the quality of the end-product.

By using a combination of modern flow sheet design and process control, Sigma can offer a complete system with substantioally improved stability and reliability.

The composition of the wet-formed lap can be maintained at a uniform level regarding fiber mixture, surface weight and chemicals, among other factors. This is an essential feature in maintaining uniform product quality.

Based on your existing layout, Sigma can offer you a tailer-made pulp control system using conventional control equipment

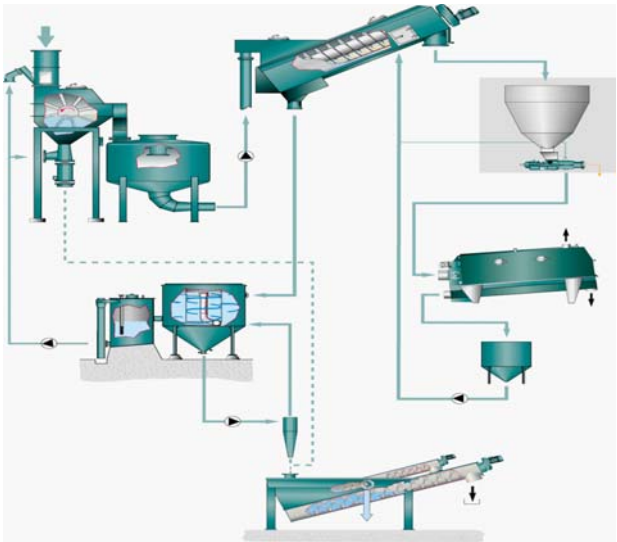

Cleaning up wet processing
With the technology available today, a wet-process line can be built with a totally closed white water system. In other words, no process water - and thus no pollution - leaves the process. However, such a system does result in a high concentration of dissoluble substances in the process water, which can create operational and quality problems. We recommend that the water system be closed until the dissolved concentration is about 3 percent, corresponding to a material discharge of about 1m^3 of polluted water per ton of production capacity. Based on practical experience, it has been established that this concentration can be quite easily handled without major process modifications and without affecting board quality.

At this level of concentration it is recommended that the remaining waste water be disposed of by evaporation. A preferred system is based on a vacuum evaporation technique, with a direct condenser using waste steam from the Defibrator cyclone as heating media.

In such a unit, the concentrated waste will leave the evaporator at 35 to 40 percent concentration. As this concentrate has a positive heat value, it can be burned in most boilers together with such fuel as waste wood, bark, chip screen fines, as well as edge trim and sander dust from the board production. Whether you opt for select a semi-closed system, with or without evaporation, or a totally closed system.

Modernizing Wet Process Fiberboard plants

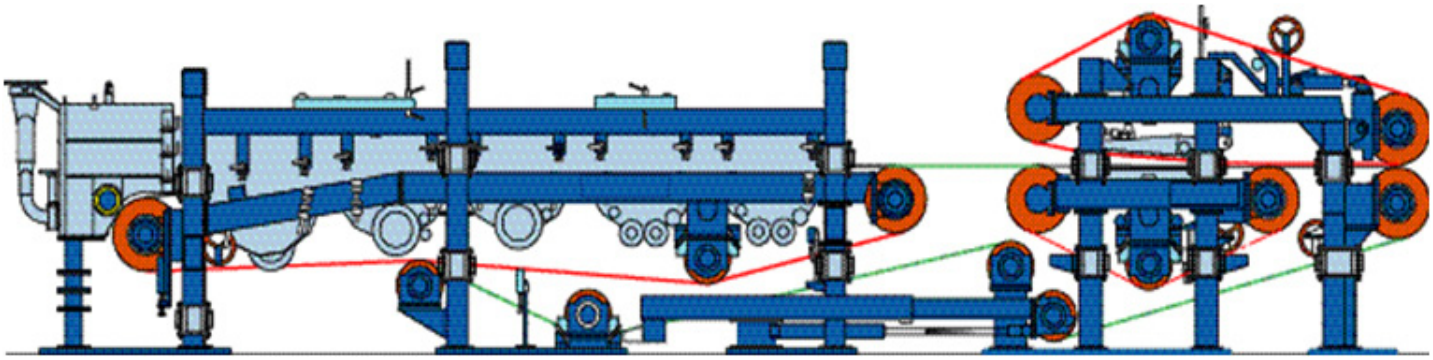

Forming the wet lap
The well known wet-lap former from Sigma is considerably more compact than conventional forming machines as a result of controlled dewatering from the inlet box to the plane press. This also ensures a uniform wet-lap with less-surface-weight fluctuations than with conventional formers.

The former can be equipped with one or two surface layer boxes for surface pulp. This makes it to form a wet lap with a surface layer of fine fiber to enhance the board's paintability.

The machine's high drainage capacity, in combination with the unique plane press section, makes it possible to achieve optimal dryness in the wet lap - without any risk of the mat crushing or cracking.

This is a key feature of our system, especially in the production of softboard, where all remaining water has to be evaporated in the softboard dryer. Raising dryness saves energy costs.

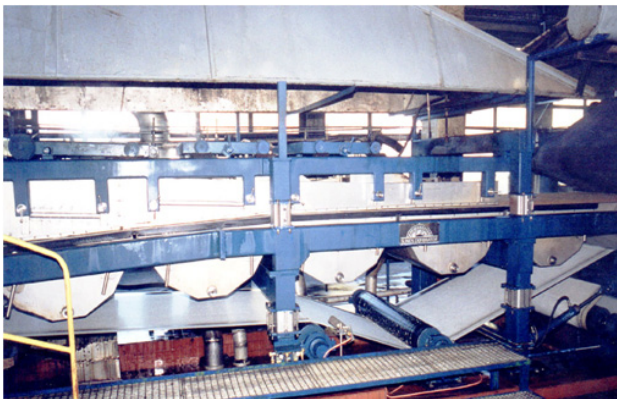

Wet-lap transport and press feeding
In many older hardboard plants, the wet-lap conveyor system, plate feeding system and the charging and discharging equipment for the press often require a considerable amount of maintenance. In addition, a worn conveyor system does not provide the accuracy, reliability and speed required for profitable operations. Sigma's conveyor systems carry the lap and the plates on belts with a large contact surface, eliminating the risk of slipping and allowing low noise high-speed transport.

The function of the wet-lap conveyor is extremely important for the positioning of the mat on the transport plate. High-pressure water-jet cutters ensure that there is perfect repeatability in length and squareness and no broken corners.

Plate and screen washing
Clean transport screens and plates are important features in maintaining both capacity and board quality. Sigma has developed and introduced a new method of cleaning both screens and plates simultaneously using high-pressure water jets. The washing unit can be installed inline, or outside the plate circulating system.

The new cleaning system eliminates the need to use chemical agents, cuts manpower requirements, reduces the amount of second-grade board produced and increases press capacity.

Modernizing Wet Process Fiberboard plants

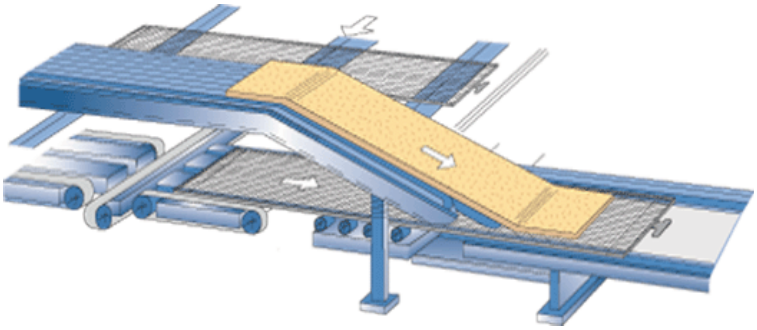

Frame feeding system
In the Sigma frame feeding system, the normal cauls have been replaced by a rigid fram of spring steel around the screen, which is itself suspended between the end bars of the fram at both ends. This design offers several important benefits:

- reduced weight
- improved heat transfer
- no caul plate thickness variation
- optimum use of press daylight openings
- shorter press time
- less maintenance

The frame feeding system is suitable for installation in both new and existing production lines, provided that in the latter case the space between the heating plate and the columns is not less than 110mm.

Modernizing your press
Based on years of experience in rebuilding and modernizing hardboard plants, Sigma has identified a number of ways to improve the performance of your press operations.
For example:

- **Cylinder renovation**
  We can re-bore worn press cylinders on site. Using mobile re-boring equip ment, our skilled engineers can re-machine and produce a smooth sur face for the packing. At the same time we will install new cylinder and gland liners. Re-boring will lengthen the work ing lifetime of the packings and decrease the number of machine stoppages for packing replacements.

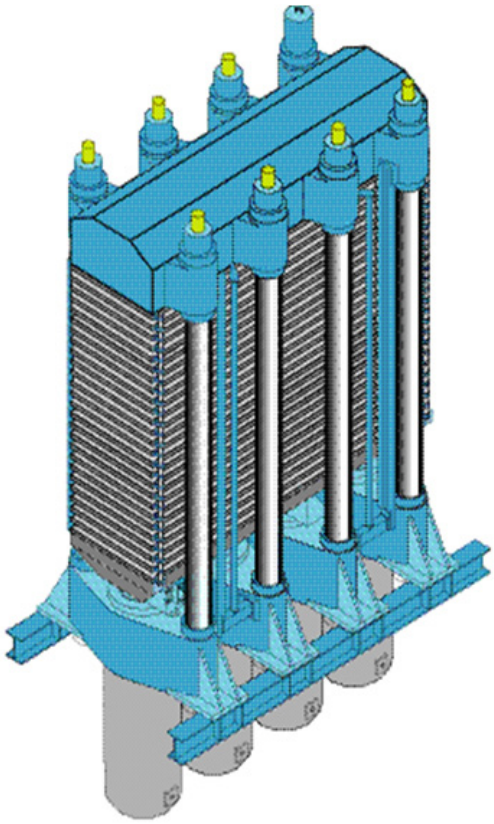

- **Top and press tables**
  By reconditioning corroded contact surfaces on both the top and press-tables and by exchanging worn-out insulation, we can improve the straightness of the tables thus reducing the thickness tolerances of the board. To extend the lifetime of the reconditioning measures, we can also face the table edges and surface with stainless material.
- Our rebuilding program also includes providing a more efficient form of insulation between the heating platens and the top table and press table respectively. This will prevent unacceptable heat deformation and further improved thickness tolerances in the pressed board.
- **Heating platens**
  When it comes to heating platens we would, of course, recommend our modern Motala longitudinal channel system based on the counterflow principle. This configuration guarantees an even temperature across the entire surface. Alternatively, we can recondition your existing platens in our workshops.

Modernizing Wet Process Fiberboard plants

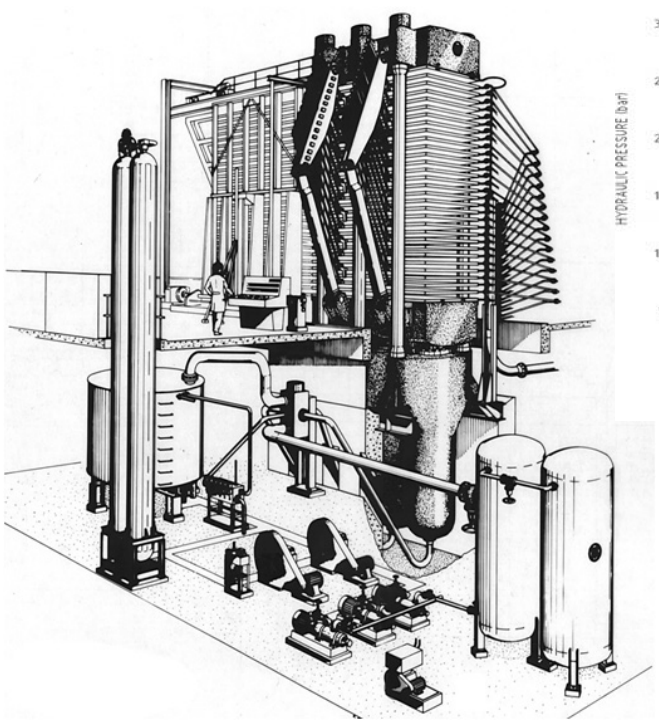

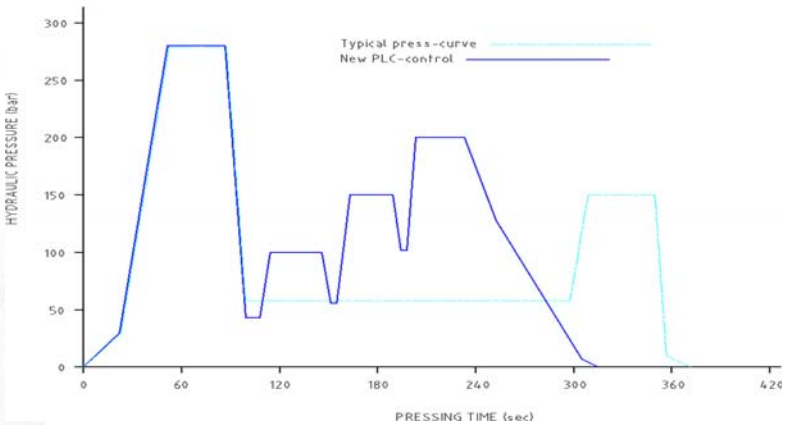

- **Columns**
  Many older press types have heavily corroded columns. Sigma offers pres-stressed columns that ensures a substantially extended lifetime.
- **Extension of press-increased capacity**
  Many old presses, are generously dimensioned and often allow more openings. The limiting factors to be considered are the length of the columns and the maximum stroke of the cylinders. Such rebuilds, increasing the capacity by about 10%, have been made in many mills.
- After inspection, our specialists can also suggest other improvements, such as better plate transport guides and stepped uprights.

Optimizing Press Performance
If you find that your press capacity is creating a bottleneck in your board operations, consider letting Sigma find the right solution.

Improvements can generally be made by:

- increasing the number of openings. This can sometimes be achieved without having to change rams and columns.
- rebuilding the hydraulic system to decrease closing and pressure build-up time. Energy consumption can also be reduced as a result of this measure.
- modernizing and automating the loading and unloading sequence, thereby minimizing dead time.
- Using a newly patented PLC- and HMI controlled press curve (shorter pressing time and improved quality). Such control system can be installed with no need for modification of existing hydraulics.

Heating the press
An important factor in ensuring high capacity utilization of the hot press is flow control of the heating media. In this area, we can provide you with the best possible solutions for flow control through the press and the control of the flow from the hot water accumulator. Our technical staff will also be able to advise whether your accumulator can be modified to increase its efficiency.

Sigma's expertise will ensure that the variation in the steam flow from the boiler to the accumulator is minimized. Control of the heating media flow can also optimize the drying capacity of the hot press. The end result is a significant increase in throughput capacity and lower costs.

Modernizing Wet Process Fiberboard plants

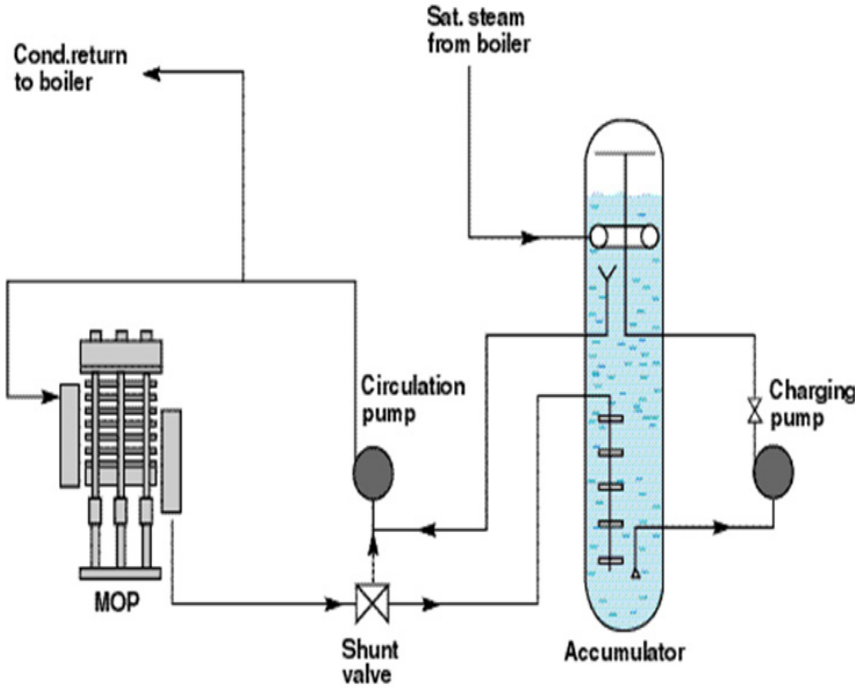

Heat treatment
Due to efforts to increase production volume there is generally insufficient capacity for heat treatment and humidification in most hardboard plants.

We can help increase throughput capacity by improing your loading and unloading tipples for the heat treatment system. In addition, we know from experience that the efficiency of most heat treatment chambers can be improved by increased air flow and modified flow distribution.

Process Control and Product Management
The basics for the process control is the PLC (Programmable Logic Controller) where start/stop of motors and basic PID controllers are handled. More sophisticated controls are nowadays also implemented i.e. automatic restarts, recipe handling.

The modern HMI (Human Machine Interface) is realized with computers where the operator handles all controls with a mouse (or trackball, touch-screen). In the HMI system, product and process management functions such as, trends of process variables, reports of variables and data as well as recipes can be handled by the operator.

Sigma has considerable experience with process control systems in the fiberboard area.

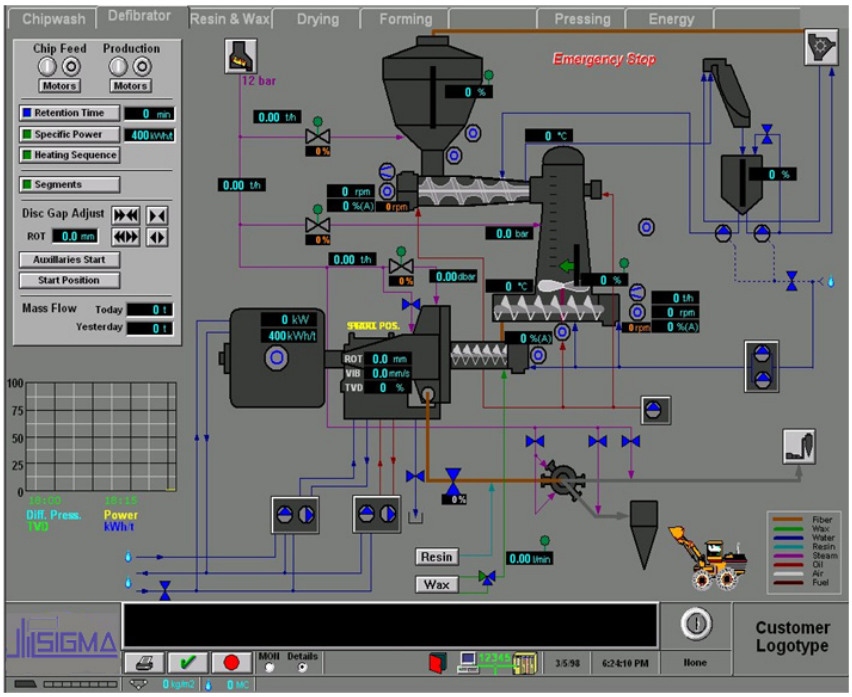

Contact us
t Wpayof

We can help you increase your profitability.
Get in contact with us at Sigma - you can be sure it will pay off!

Körkarlsvägen 4
SE-650 02 Karlstad, Sweden
Phone +46 54 54 85 50
Fax +46 54 54 78 76

mailbox@sigma-mecer.com
www.sigma-gruppen.com

We design for the future !